fire kloud

AEROSOL
REVOLUTION
TECHNOLOGY



FKa 20 RT

Installation sheet

Installation, assembly and connection instructions

UNI EN 15276
ISO 15779

15 YEARS
Certified product life

Rev. 02 EN 10/2025

FIREX TECNOLOGIE ANTINCENDIO

Fir.Ex. S.r.l.
Via delle Centurie, 3/5 - 03100 Frosinone
t +39 0775 1530692 r.a. **www.firekloud.it**

MADE IN ITALY

Member of CISQ Federation
RINA
CERTIFIED MANAGEMENT SYSTEM
ISO 9001

FKa 20 RT

Installation, assembly and connection sheet

fire kloud AEROSOL REVOLUTION TECHNOLOGY

Package contents

- Aerosol generator mod. FKa 20 RT.
- Fixing bracket.
- 2 lock washers and 2 M6 hex bolts.
- Identifying label.
- Installation, assembly and connection sheet.
- Connection cable to interconnect multiple aerosol generators L=2m.
- 2 four-pole terminal blocks.
- QR code label.

Dimensions FKa 20 RT

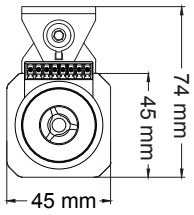

front view

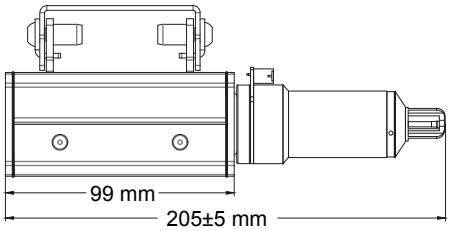

side view

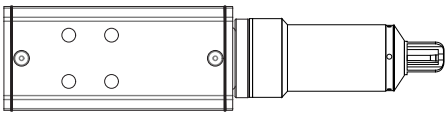

bottom view

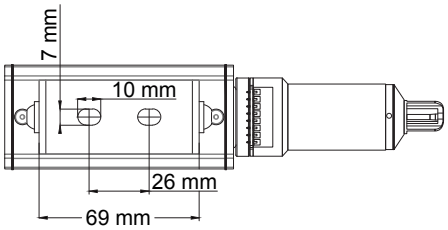

top view

Generator discharge features

Before positioning the generator, check that it is compatible with the discharge range and that safety distances are observed (for details see the Installation and operation manual).

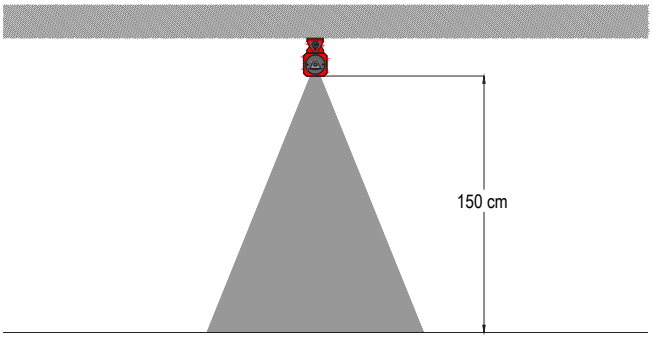

Flow direction and range during discharge

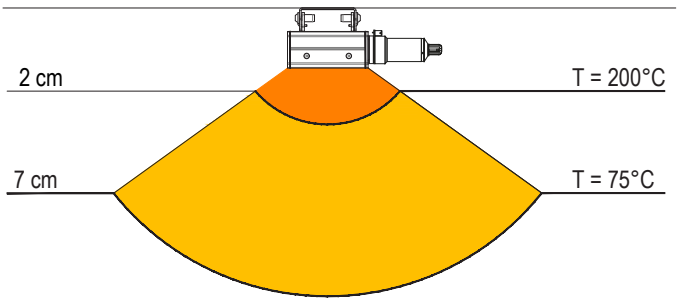

Flow temperatures during discharge

FIREX TECNOLOGIE ANTINCENDIO

Fir.Ex. S.r.l.
Via delle Centurie, 3/5 - 03100 Frosinone
t +39 0775 1530692 r.a. www.firekloud.it

MADE IN ITALY

Member of CISQ Federation RINA CERTIFIED MANAGEMENT SYSTEM ISO 9001

FKa 20 RT

Installation, assembly and connection sheet

fire kloud AEROSOL REVOLUTION TECHNOLOGY

Connection procedures

- Before connecting the generators, read the T-Kloud installation and operation manual carefully.
- Once all components have been secured and connected, and after performing the system function tests, remove the safety pin.

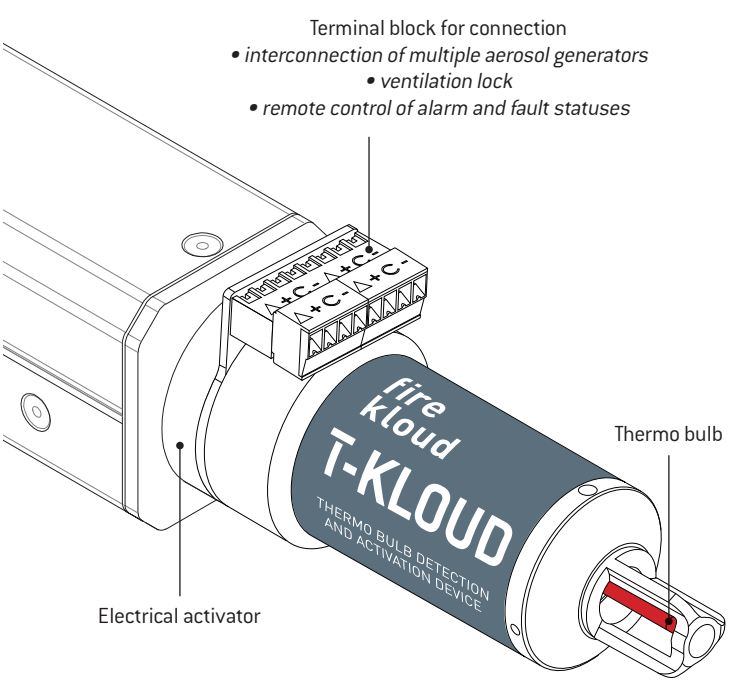

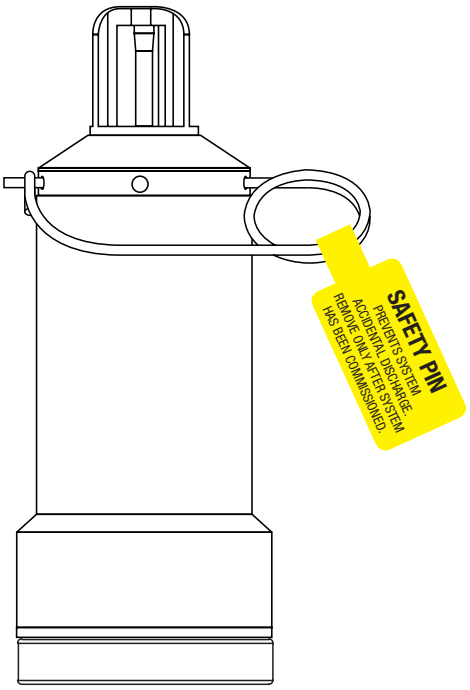

Anchoring and fixing methods

The fastener for fixing the generator must be selected based on the characteristics of the support and must be suitable to guarantee the anchoring during generator operation.

at the top centre of the compartment

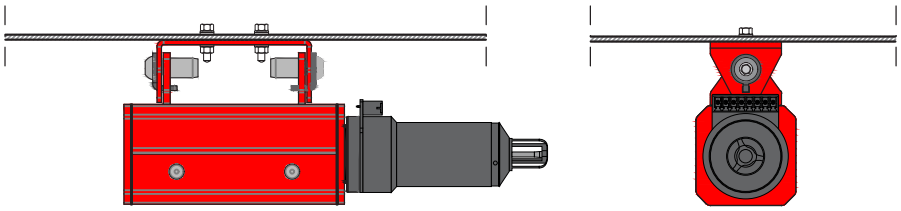

at the top rotated by 30°

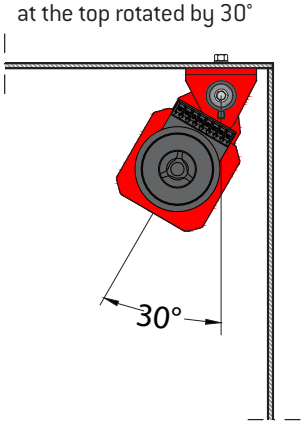

laterally rotated by 30°

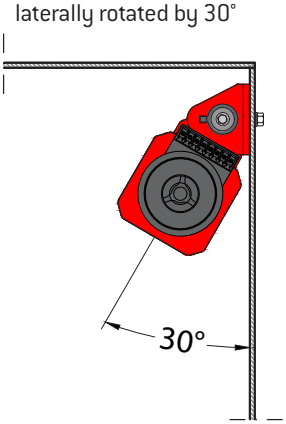

fixing detail

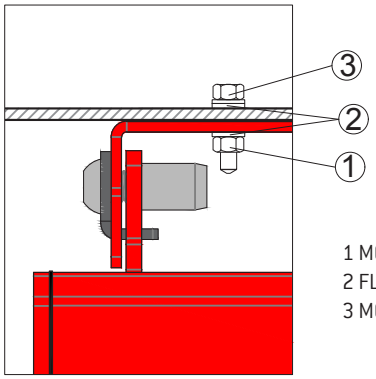

1 M6 NUT
2 FLAT WASHER
3 M6 BOLT

FIREX TECNOLOGIE ANTINCENDIO

Fir.Ex. S.r.l.
Via delle Centurie, 3/5 - 03100 Frosinone
t +39 0775 1530692 r.a. www.firekloud.it

MADE IN ITALY

Member of CISQ Federation RINA CERTIFIED MANAGEMENT SYSTEM ISO 9001

FKa 20 RT

Installation, assembly and connection sheet

fire kloud AEROSOL REVOLUTION TECHNOLOGY

Bracket mounting instructions

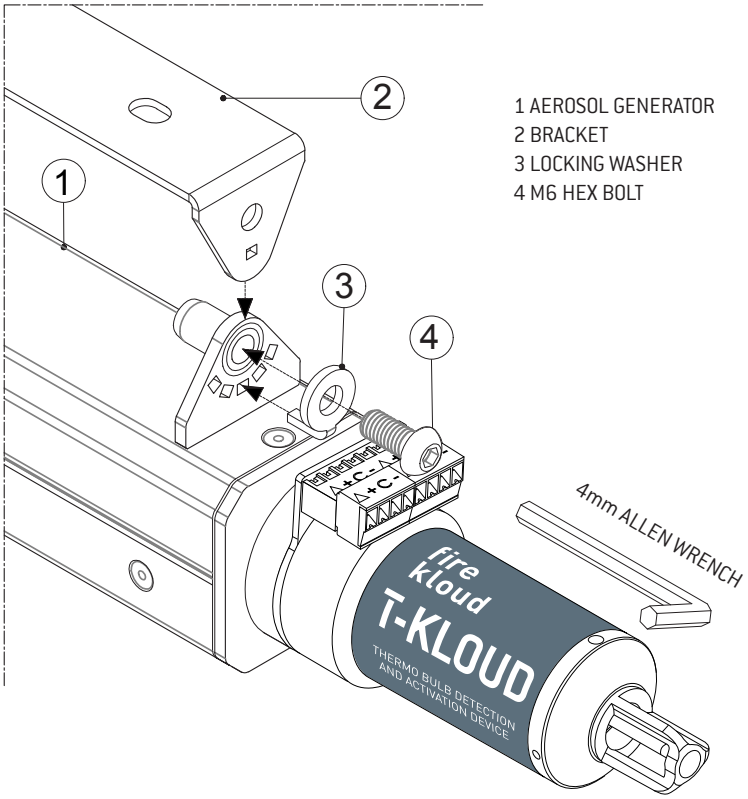

1 AEROSOL GENERATOR
2 BRACKET
3 LOCKING WASHER
4 M6 HEX BOLT

INSTALLATION FLEXIBILITY

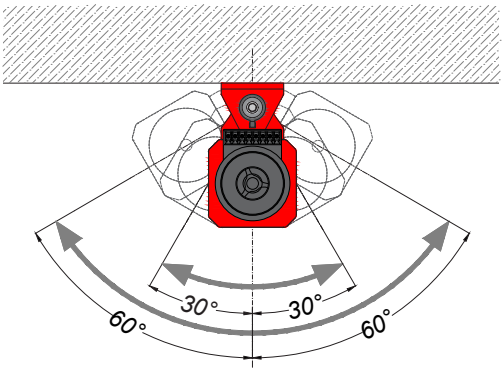

IDENTIFYING LABEL



The QR code contains the model, the serial number, the production date, the expiry date, the drawing, the technical data sheet and the installation instructions of the generator.

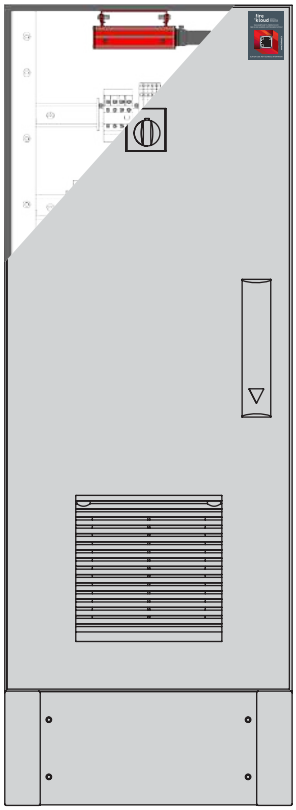

Apply the identification label to the outside of the electrical panel in a clearly visible position (e.g., on the outside of the door) and complete it with the QR code label in the indicated position.

For systems with multiple generators, apply the label to each door of the panel.

WARNINGS

The expiry date of the aerosol generator is 15 years, while for the T-Kloud it is 10 years from the date of manufacture.

FIREX TECNOLOGIE ANTINCENDIO

Fir.Ex. S.r.l.
Via delle Centurie, 3/5 - 03100 Frosinone
t +39 0775 1530692 r.a. **www.firekloud.it**

MADE IN ITALY

Member of CISQ Federation RINA CERTIFIED MANAGEMENT SYSTEM ISO 9001

FKa 20 RT

Installation, assembly and connection sheet

fire kloud AEROSOL REVOLUTION TECHNOLOGY

Installation in electrical equipment

EXAMPLES OF INSTALLATION IN ELECTRICAL EQUIPMENT

Installation in case of vertical segregation

front view

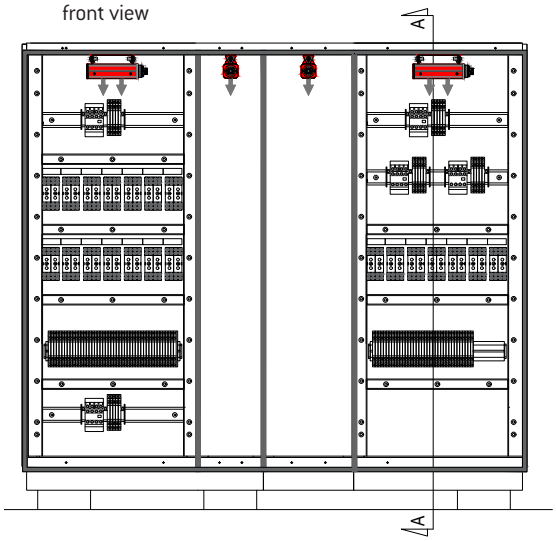

A-A section

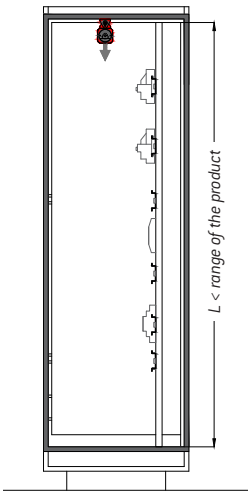

incorrect solutions

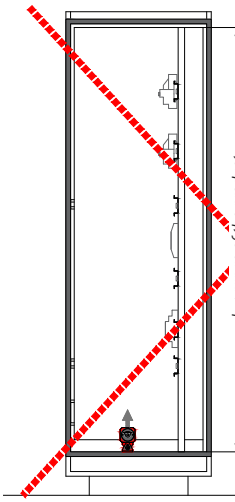

L > range of the product

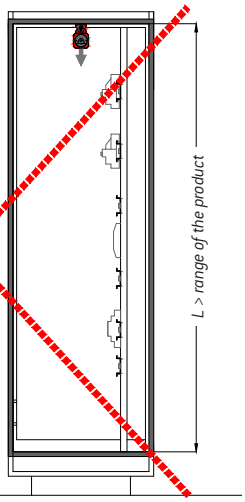

Top installation rotated by 30°

front view

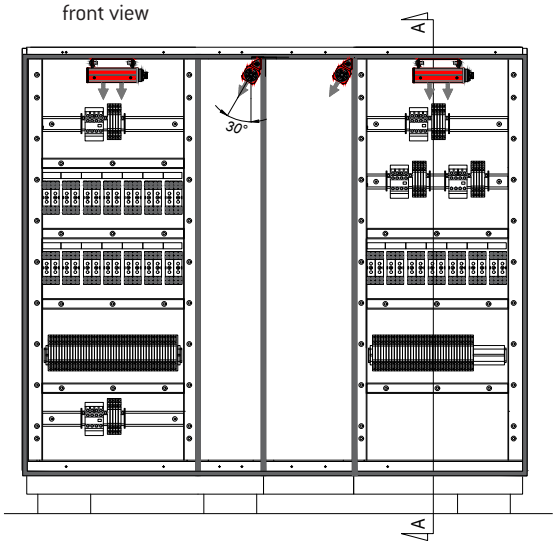

A-A section

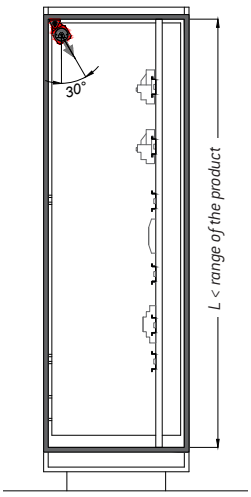

incorrect solutions

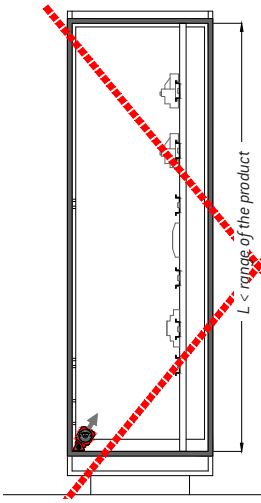

L > range of the product

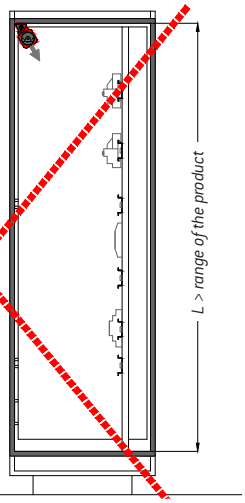

WARNINGS FOR INSTALLATION IN ELECTRICAL EQUIPMENT

- The generators must be installed as described in the following points, and in any case in a number and position that guarantee an even distribution and a correct concentration;
- The generator must be installed in accordance with the manufacturer's instructions and in compliance with the safety distances;
- Position the generator at the top of the protected compartment with the flow directed downwards as shown in the drawings;
- Direct the flow in the direction of the potential fire start;
- If there are segregations at the front of the switchboard, position the generator at the rear to protect the connection bars, wiring and components;
- If there are switchboards with withdrawable drawers at the front, position the generator at the rear to protect the cable leads and copper bars;
- In the case of segregated cable runs and/or horizontal segregation, protect each segregated compartment with a suitable sized generator;
- Due to the high temperature of the generator after activation, make sure the metal casing does not touch any objects or materials (switches, cables, conduits, etc.);
- Ensure that there are no objects or other things involved at distances shorter than the safety distance (recommended distance from the flow ≥10 cm);
- For a correct distribution of the aerosol, make sure that the direction of discharge is respected and that the flow comes out freely (recommended distance from the flow of any obstacles ≥30 cm);
- The fixing of the generator must be chosen according to the characteristics of the support;
- In the presence of components that obstruct the normal distribution of the extinguishing agent, provide more than one point of discharge;
- Respect the installation height of the generators in accordance with the maximum discharge range or provide several discharge points for electrical cabinets with a higher discharge range.

FIREX TECNOLOGIE ANTINCENDIO

Fir.Ex. S.r.l.
Via delle Centurie, 3/5 - 03100 Frosinone
t +39 0775 1530692 r.a. **www.firekloud.it**

MADE IN ITALY

Member of CISQ Federation RINA CERTIFIED MANAGEMENT SYSTEM ISO 9001

FKa 20 RT

Installation, assembly and connection sheet

fire kloud AEROSOL REVOLUTION TECHNOLOGY

EXAMPLES OF INSTALLATION IN ELECTRICAL EQUIPMENT

Installation in case of vertical segregation

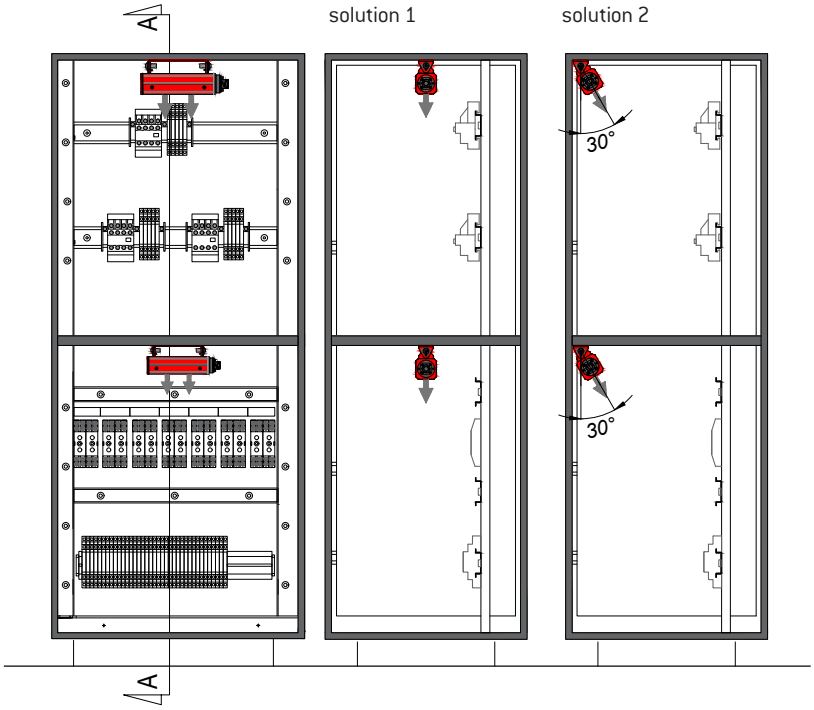

WARNINGS FOR INSTALLATION IN ELECTRICAL EQUIPMENT

- The generators must be installed as described in the following points, and in any case in a number and position that guarantee an even distribution and a correct concentration;
- The generator must be installed in accordance with the manufacturer's instructions and in compliance with the safety distances;
- Position the generator at the top of the protected compartment with the flow directed downwards as shown in the drawings;
- Direct the flow in the direction of the potential fire start;
- If there are segregations at the front of the switchboard, position the generator at the rear to protect the connection bars, wiring and components;
- If there are switchboards with withdrawable drawers at the front, position the generator at the rear to protect the cable leads and copper bars;
- In the case of segregated cable runs and/or horizontal segregation, protect each segregated compartment with a suitable sized generator;
- Due to the high temperature of the generator after activation, make sure the metal casing does not touch any objects or materials (switches, cables, conduits, etc.);
- Ensure that there are no objects or other things involved at distances shorter than the safety distance (recommended distance from the flow ≥10 cm);
- For a correct distribution of the aerosol, make sure that the direction of discharge is respected and that the flow comes out freely (recommended distance from the flow of any obstacles ≥30 cm);
- The fixing of the generator must be chosen according to the characteristics of the support;
- In the presence of components that obstruct the normal distribution of the extinguishing agent, provide more than one point of discharge;
- Respect the installation height of the generators in accordance with the maximum discharge range or provide several discharge points for electrical cabinets with a higher discharge range.

FIREX TECNOLOGIE ANTINCENDIO

Fir.Ex. S.r.l.
Via delle Centurie, 3/5 - 03100 Frosinone
t +39 0775 1530692 r.a. **www.firekloud.it**

MADE IN ITALY

Member of CISQ Federation
RINA CERTIFIED MANAGEMENT SYSTEM ISO 9001

FKa 20 RT

Installation, assembly and connection sheet

fire kloud AEROSOL REVOLUTION TECHNOLOGY

Connections

STAND-ALONE VERSION WITHOUT REMOTE CONTROL

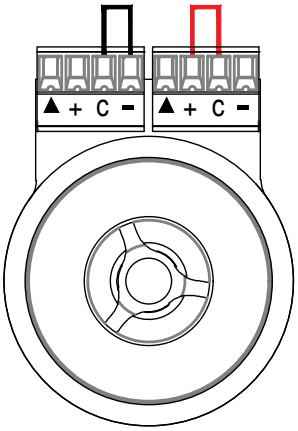

⚠ To guarantee the correct operation of the system, pay attention to the connection of the terminal blocks.

Connect the supplied terminal blocks, complete with closing jumpers, to the terminal block on the T-Kloud body. Respect the colours of the jumpers as shown in the figure.

CONNECTION UP TO 8 GENERATORS WITHOUT REMOTE CONTROL

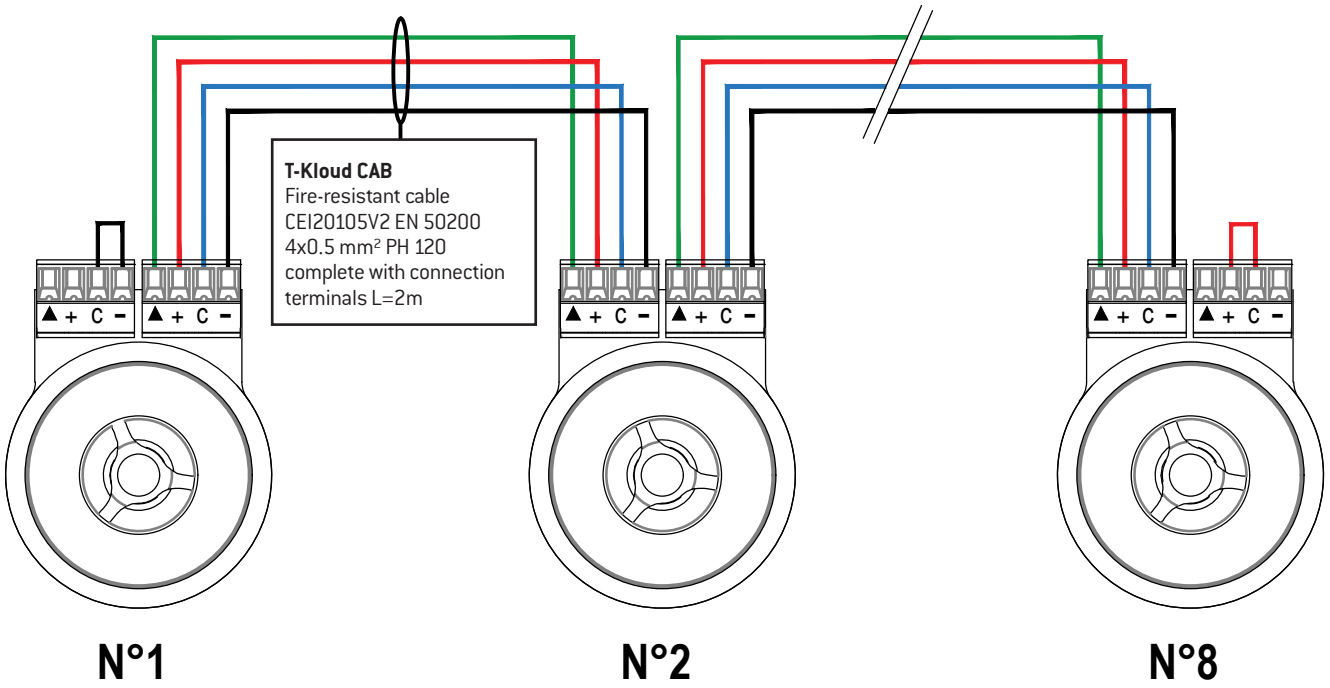

To connect multiple aerosol generators equipped with the T-Kloud device:

- connect the connection terminals respecting the colours of the circuit closure jumpers on the first and last generators in the series;
- connect the generators to each other using the supplied T-Kloud CAB cable as shown in the diagram.

FIREX TECNOLOGIE ANTINCENDIO

Fir.Ex. S.r.l.
Via delle Centurie, 3/5 - 03100 Frosinone
t +39 0775 1530692 r.a. www.firekloud.it

MADE IN ITALY

Member of CISQ Federation RINA CERTIFIED MANAGEMENT SYSTEM ISO 9001

FKa 20 RT

Installation, assembly and connection sheet

fire kloud AEROSOL REVOLUTION TECHNOLOGY

Connections

REMOTE ALARM AND FAULT MONITORING

T-Kloud remote connection diagram with support terminal block

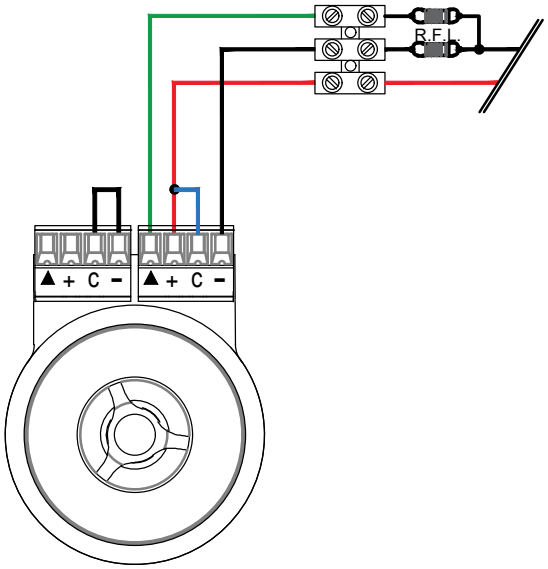

remote alarm and fault transmission to IRAI control unit and/or I/O module

T-Kloud remote connection diagram without support terminal block

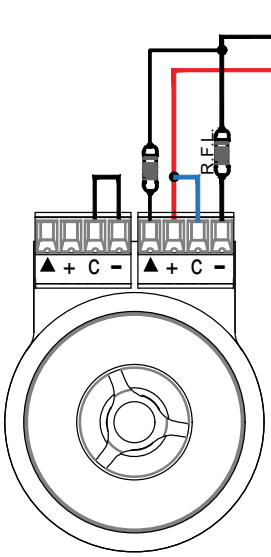

remote alarm and fault transmission to IRAI control unit and/or I/O module

The device has a NO contact to indicate the alarm status and allows fault status monitoring. Alarm and fault statuses can be remotely controlled directly on the connection terminal block of the first T-Kloud device in the series, or using a support terminal block inside the protected electrical equipment.

Connection in the event of remote alarm and fault status:

- remove the red jumper;
- connect the cable coming from an I/O module or from an IRAI control unit zone;
- cable the end-of-line and load resistors required by the IRAI control unit as shown in the diagram.

FIREX TECNOLOGIE ANTINCENDIO

Fir.Ex. S.r.l.
Via delle Centurie, 3/5 - 03100 Frosinone
t +39 0775 1530692 r.a. **www.firekloud.it**

MADE IN ITALY

Member of CISQ Federation RINA CERTIFIED MANAGEMENT SYSTEM ISO 9001

FKa 20 RT

Installation, assembly and connection sheet

fire kloud AEROSOL REVOLUTION TECHNOLOGY

Connections

REMOTE ALARM, FAULT AND VENTILATION LOCK

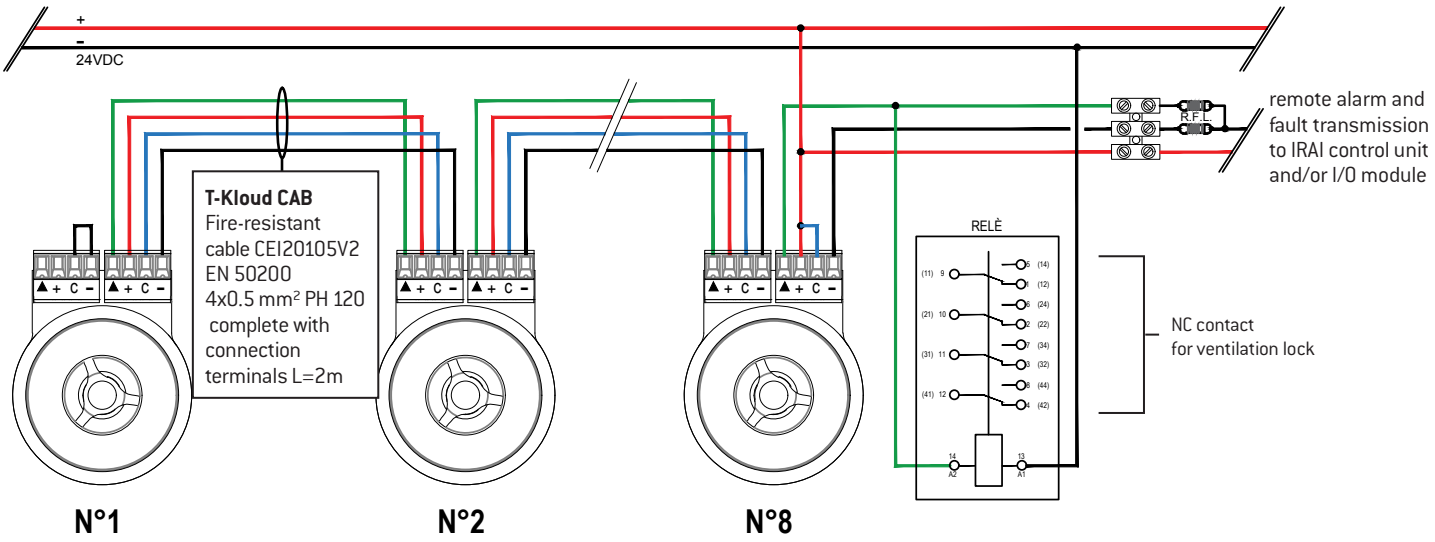

In the event that the alarm and fault statuses need to be remote controlled and the ventilation of the protected device needs to be locked at the same time, it will be necessary to use an external relay with 4 changeover contacts and connect the fan power supply to the NC contact of the relay. Follow the diagram for cabling.

CONNECTION FOR VENTILATION LOCK

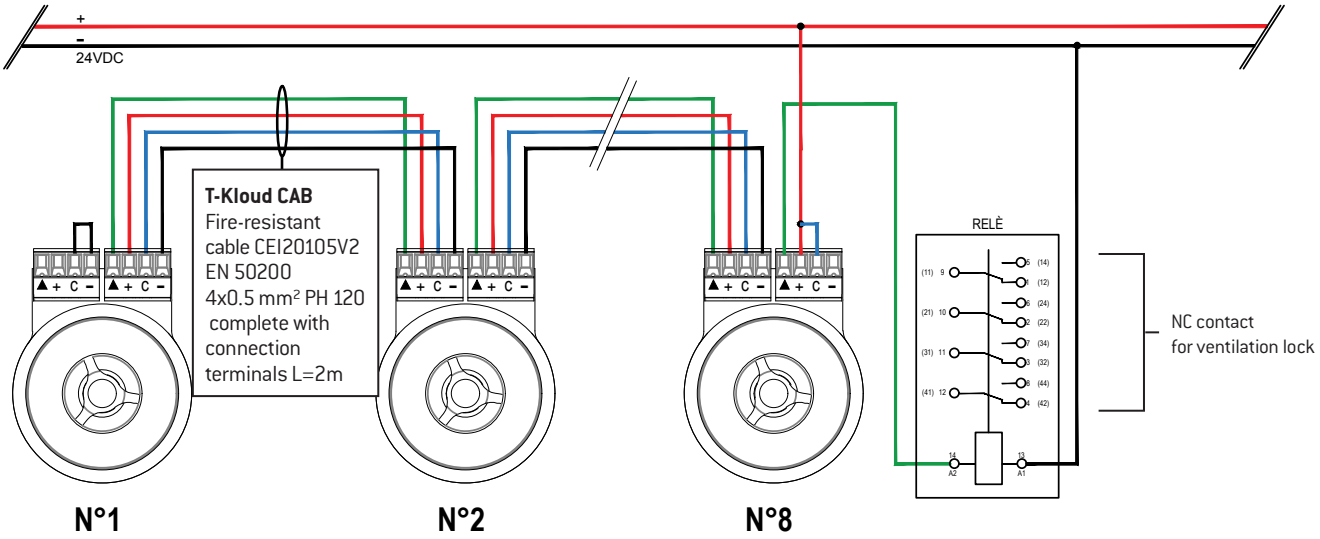

If you wish to lock the ventilation of the protected device, you will need to use an external relay with 4 changeover contacts and connect the fan power supply to the NC contact of the relay. Follow the diagram for cabling.

FIREX TECNOLOGIE ANTINCENDIO

Fir.Ex. S.r.l.
Via delle Centurie, 3/5 - 03100 Frosinone
t +39 0775 1530692 r.a. www.firekloud.it

MADE IN ITALY

Member of CISQ Federation RINA CERTIFIED MANAGEMENT SYSTEM ISO 9001